SEM-FIB Solutions

Mechanical Conversion for High-Throughput TEM Sample Preparation

Anthony B. Kendrick (SEM-FIB Solutions, UK)

Thomas M. Moore (Omniprobe, USA)

Lyudmila Zaykova-Feldman (Omniprobe, USA)

Mechanical Conversion for High-Throughput TEM Sample Preparation

Agenda:

1. **Background: FIB In-Situ Lift-Out**
2. Time management in FIB in-situ lift-out
3. Mechanical conversion for high throughput
4. Efficient management of in-line and off-line FIB resources
5. Summary

Mechanical Conversion for High-Throughput TEM Sample Preparation

Sequence for In-Situ Lift-Out (Total Release™ Method):

A. 1st cut
B. 2nd cut
C. Tip attach
D. Lift-out
E. Grid attach
F. Tip detach

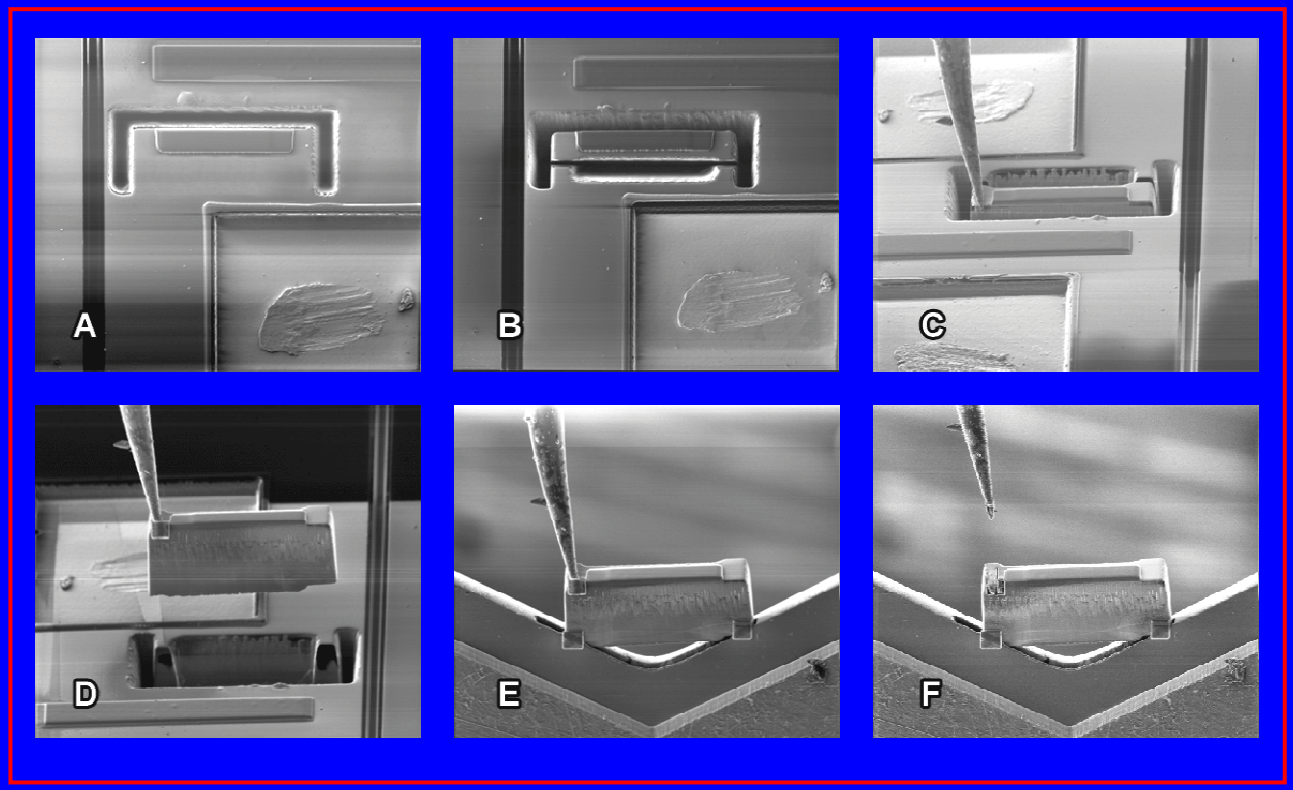

Mechanical Conversion for High-Throughput TEM Sample Preparation

Agenda:

1. Background: FIB In-Situ Lift-Out
2. **Time management in FIB in-situ lift-out**
3. Mechanical conversion for high throughput
4. Efficient management of in-line and off-line FIB resources
5. Summary

Mechanical Conversion for High-Throughput TEM Sample Preparation

Time management in FIB in-situ lift-out

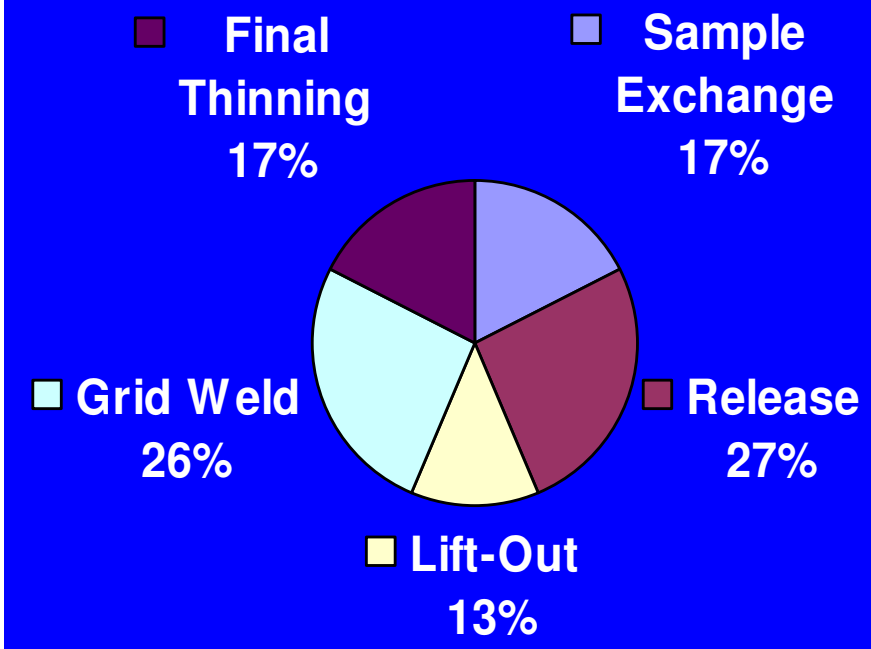

Reduces time in the on-line FIB by ~43% (300mm wafer FIB)
Reduces overall FIB time required by ~26%
Reduces skill level required at on-line FIB (only lift-out required)
Leverages FIB resources in off-line labs for final thinning (FIB or small dual beam, flip stage, etc..)

Based on typical "novice" lift-out experience of less than 2 hours in a DB235 with the grid holder in the chamber with the sample.

Mechanical Conversion for High-Throughput TEM Sample Preparation

Agenda:

1. Background: FIB In-Situ Lift-Out
2. Time management in FIB in-situ lift-out
3. **Mechanical conversion for high throughput**
4. Efficient management of in-line and off-line FIB resources
5. Summary

Mechanical Conversion for High-Throughput TEM Sample Preparation

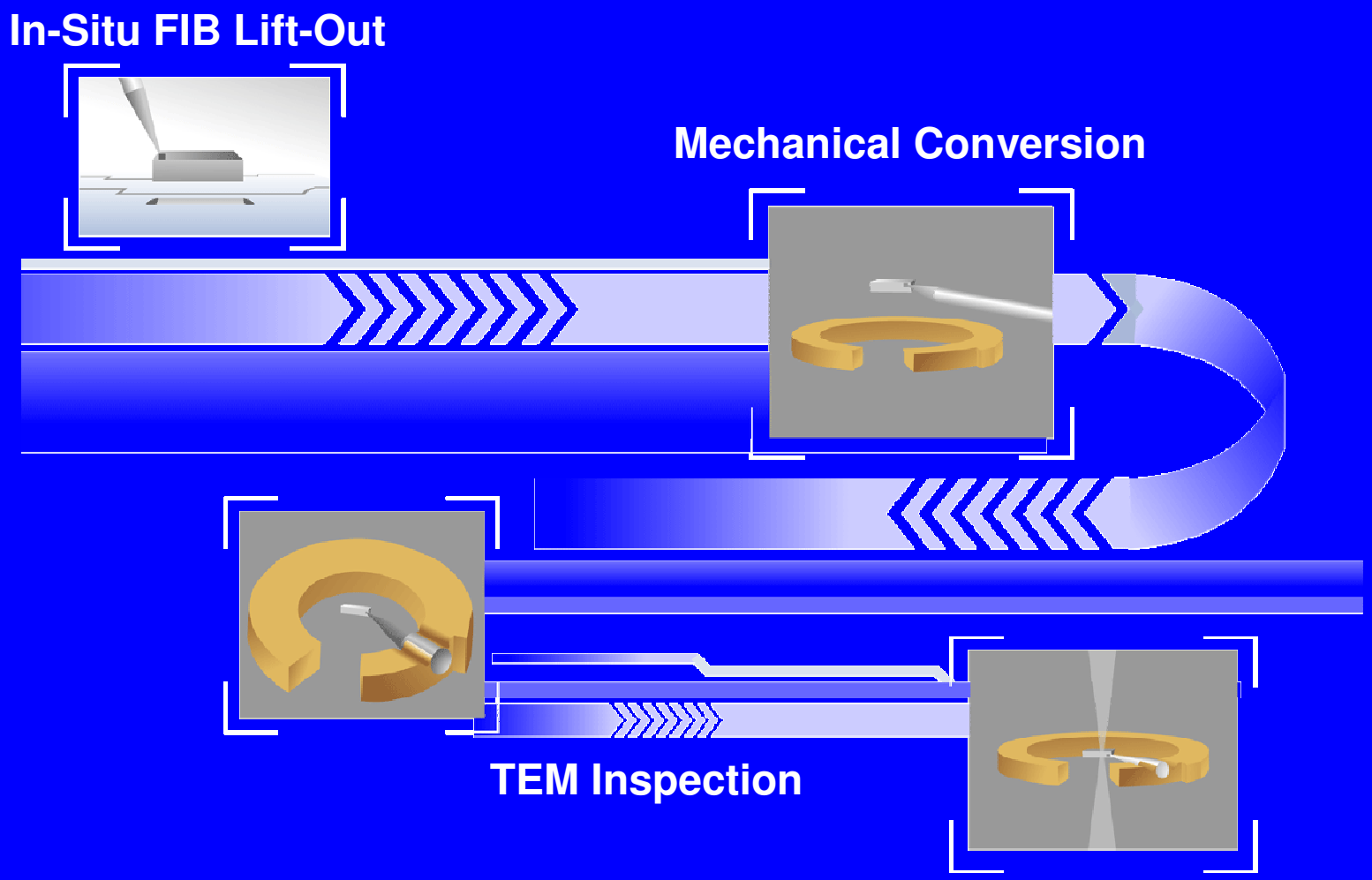

Mechanical Conversion for High-Throughput TEM Sample Preparation

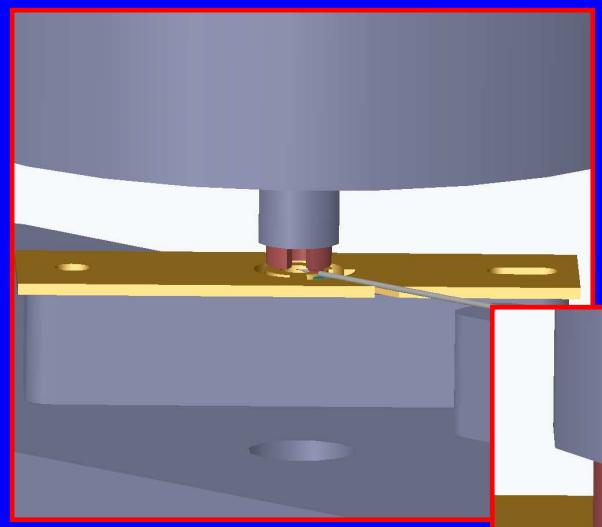

Convenient coupons replace TEM grids

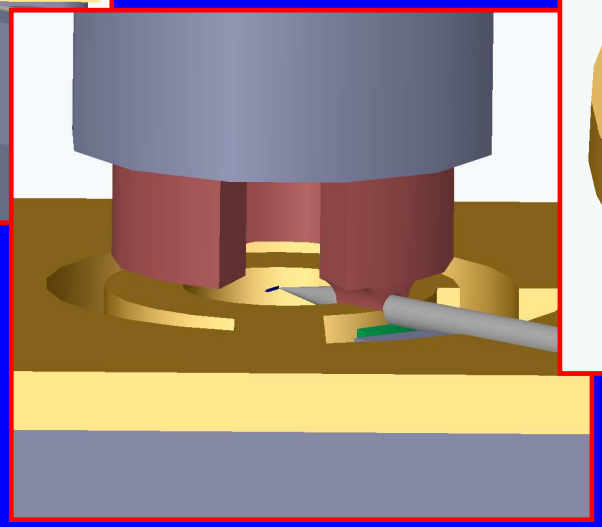

From lift-out to TEM grid at the push of a button

Robust horse-shoe grids fit standard 3mm holders

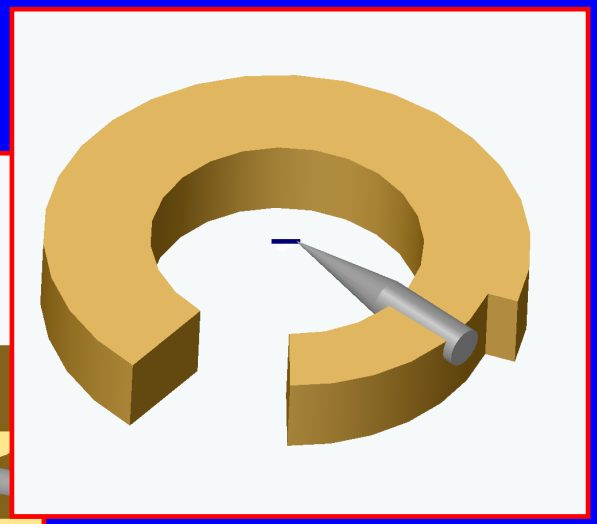

Compatible with standard TEM sample holders

Mechanical Conversion for High-Throughput TEM Sample Preparation

Agenda:

1. Background: FIB In-Situ Lift-Out
2. Time management in FIB in-situ lift-out
3. Mechanical conversion for high throughput
4. **Efficient management of in-line and off-line FIB resources**
5. Summary

Mechanical Conversion for High-Throughput TEM Sample Preparation

Efficient management of in-line and off-line FIB resources

In-Line

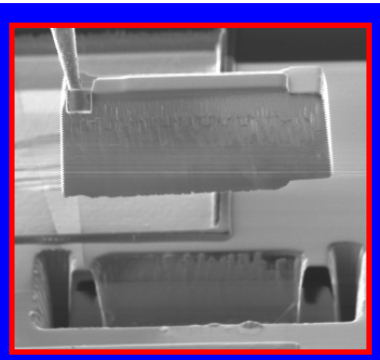

In-Situ Lift-Out (Full Wafer FIB)

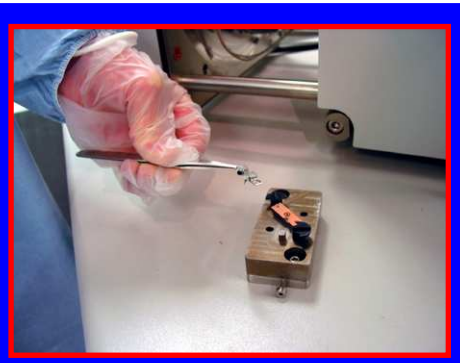

In-Situ Tip Change

Off-Line

TEM or DB-STEM

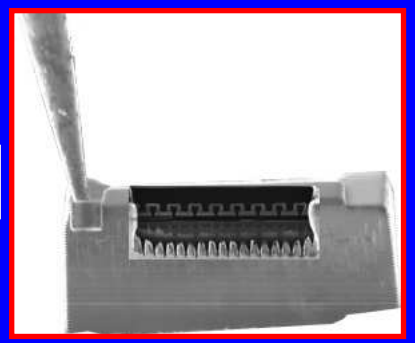

Final Thinning

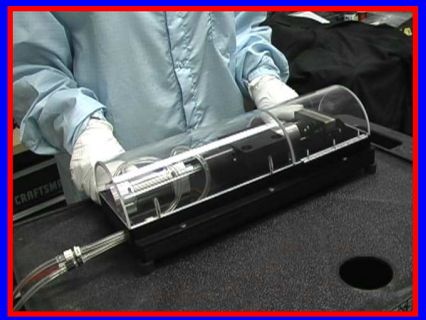

Mech. Conversion

Mechanical Conversion for High-Throughput TEM Sample Preparation

Top-side thinning,
Single sample

Top-side thinning,
Multiple samples

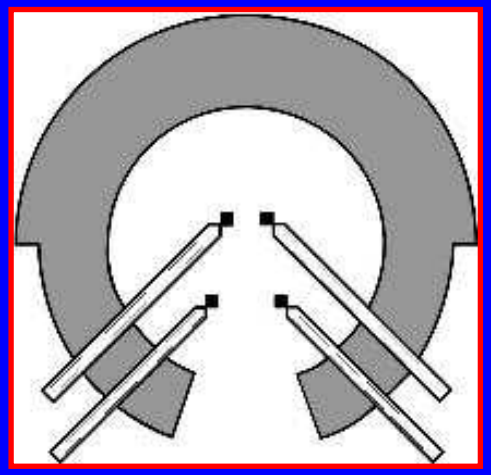

Back-side thinning,
Multiple samples

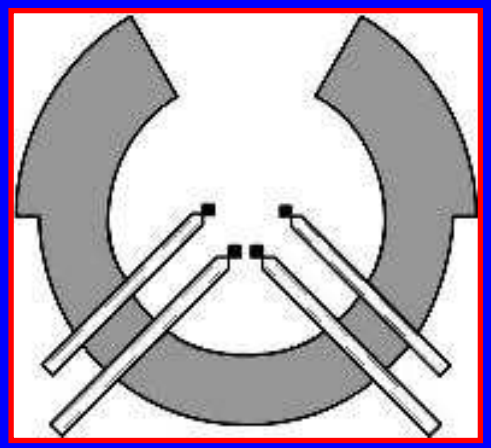

Mechanical Conversion for High-Throughput TEM Sample Preparation

Agenda:

1. Background: FIB In-Situ Lift-Out
2. Time management in FIB in-situ lift-out
3. Mechanical conversion for high throughput
4. Efficient management of in-line and off-line FIB resources
5. **Summary**

Mechanical Conversion for High-Throughput TEM Sample Preparation

Summary [1]:

1. **A system for increasing throughput of FIB in-situ TEM sample prep involving mechanical conversion of the lift-out sample to a standard TEM sample has been developed.**

2. **Robust mechanically converted TEM samples survive rigorous mechanical testing with no drop-outs.**

3. **Compatible with standard 3mm TEM sample holders.**

4. **Alignment (planarity and center) of the TEM sample is established in the FIB and maintained through the process.**

5. **Maximizes resource efficiency in a high throughput "in-line + off-line" plan for FIB and TEM resources.**

Mechanical Conversion for High-Throughput TEM Sample Preparation

Summary [2]:

6. **Compatible with Total Release in-situ lift-out method.**
7. **Thinning for TEM can be performed prior to or after conversion.**
8. **Enables both top-side and back-side thinning (to avoid "shower curtain" effect).**
9. **Reduces contamination from grid during low-energy ion cleanup.**
10. **Compatible with a multi-sample format and additional throughput features in development.**

Mechanical Conversion for High-Throughput TEM Sample Preparation

Acknowledgements:

Gonzalo Amador, Omniprobe, Inc.
Rocky Kruger, Omniprobe, Inc.
Marlin Anderson, Omniprobe, Inc.

Omniprobe
www.omniprobe.com

SEM-FIB Solutions